MAGMA PRODUCTS, INC.
3940 PIXIE AVE. ▪ LAKEWOOD, CA 90712 ▪ TEL (562) 627-0500 ▪ FAX (562) 627-0550
www.MagmaProducts.com ▪ email: Mail@MagmaProducts.com

A10-801
TRAILMATE™
CONNOISSEUR SERIES
GAS GRILL
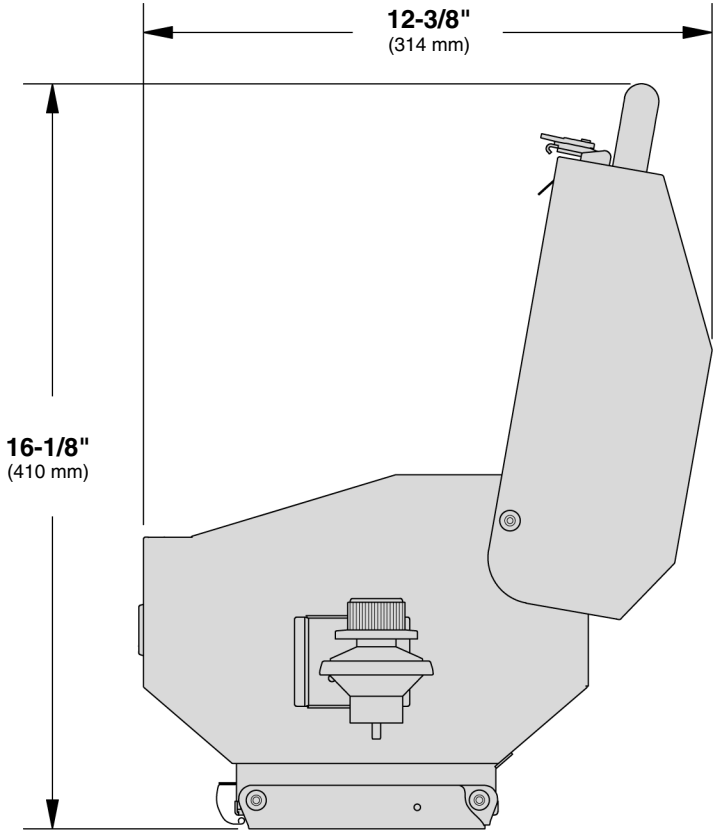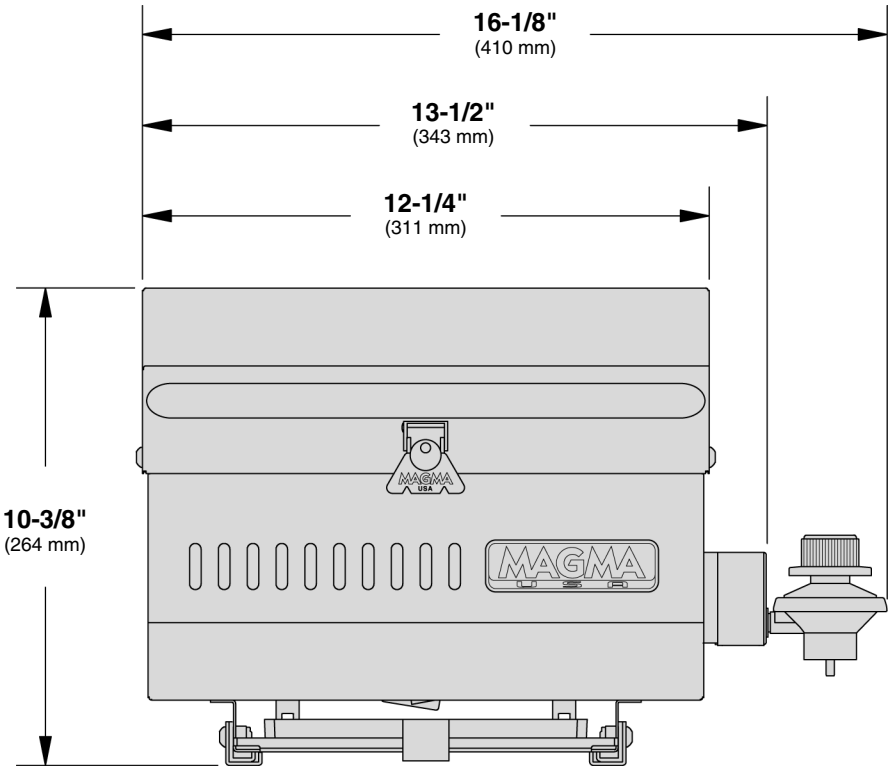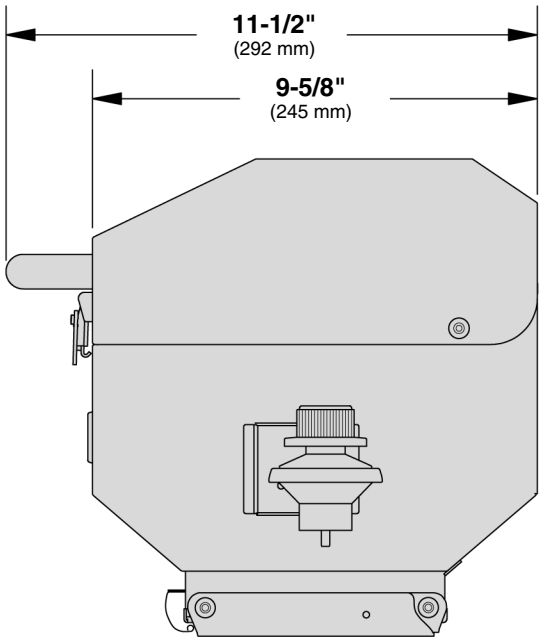
Grill Weight 10.27 lb.
(4.66 kg)